45° ELBOW

ASME B16.11-2009(Revision of ASME B16.11-2005)

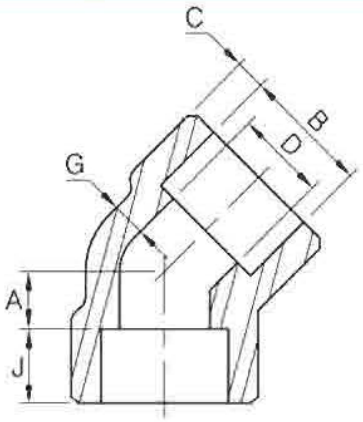

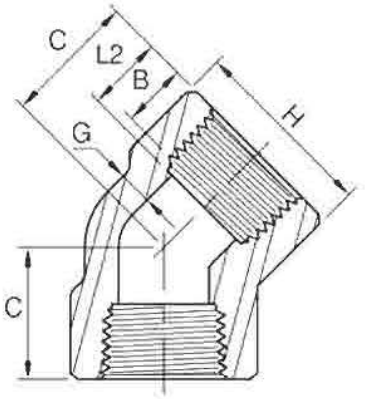

Dimensions in Millimeters.

Socket Welding

DN	Nom. Pipe Size	B(2)	C(1) (Avg)	C(1) (Min)	D(2)	A(2)	G (Min)	J (Min)
3000Lb								
6	1/8	10.8	3.18	3.18	6.9	8.0	2.41	9.5
8	1/4	14·2	3·78	3·30	9·3	8·0	3·02	9·5
10	3/8	17.6	4.01	3.50	12.6	8.0	3.20	9.5
15	1/2	21.8	4.67	4.09	15.8	11.0	3.73	9.5
20	3/4	27.2	4.90	4.27	21.0	13.0	3.91	12.5
25	1	33.9	5.69	4.98	26.7	14.0	4.55	12.5
32	1-1/4	42.7	6.07	5.28	35.1	17.5	4.85	12.5
40	1-1/2	48.8	6.35	5.54	40.9	20.5	5.08	12.5
50	2	61.2	6.93	6.04	52.5	25.5	5.54	16.0
65	2-1/2	73.9	8.76	7.67	62.7	28.5	7.01	16.0
80	3	89.8	9.52	8.30	78.0	32.0	7.62	16.0
100	4	115.2	10.69	9.35	102.3	41.0	8.56	19.0
6000Lb								
6	1/8	10.8	3.96	3.43	4.0	8.0	3.15	9.5
8	1/4	14.2	4.60	4.01	6.4	8.0	3.68	9.5
10	3/8	17.6	5.03	4.37	9.2	11.0	4.01	9.5
15	1/2	21.8	5.97	5.18	11.8	12.5	4.78	9.5
20	3/4	27.2	6.96	6.04	15.6	14.0	5.56	12.5
25	1	33.9	7.92	6.93	20.7	17.5	6.35	12.5
32	1-1/4	42.7	7.92	6.93	29.5	20.5	6.35	12.5
40	1-1/2	48.8	8.92	7.80	34.0	25.5	7.14	12.5
50	2	61.2	10.92	9.50	42.9	28.5	8.74	16.0
9000Lb								
15	1/2	21.8	9.35	8.18	6.4	15.5	7.47	9.5
20	3/4	27.2	9.78	8.56	11.1	19.0	7.82	12.5
25	1	33.9	11.38	9.96	15.2	20.5	9.09	12.5
32	1-1/4	42.7	12.14	10.62	22.8	22.5	9.70	12.5
40	1-1/2	48.8	12.70	11.12	28.0	25.5	10.15	12.5
50	2	61.2	13.84	12.12	38.2	28.5	11.07	16.0

(1) Average of socket Wall Thickness around periphery shall be no less than listed values. The minimum values are permitted in localized areas.

(2) Tolerance see page 16.

Dimensions in Millimeters.

Threaded

DN	Nom. Pipe Size	Length of Thread. (Min) B(*)	Length of Thread. (Min) L2(*)	C	G (Min)	H
2000Lb						
6	1/8	6.4	6.7	17	3.18	22
8	1/4	8.1	10.2	17	3.18	22
10	3/8	9.1	10.4	19	3.18	25
15	1/2	10.9	13.6	22	3.18	33
20	3/4	12.7	13.9	25	3.18	38
25	1	14.7	17.3	28	3.68	46
32	1-1/4	17.0	18.0	33	3.89	56
40	1-1/2	17.8	18.4	35	4.01	62
50	2	19.0	19.2	43	4.27	75
65	2-1/2	23.6	28.9	52	5.61	92
80	3	25.9	30.5	64	5.99	109
100	4	27.7	33.0	79	6.55	146
3000Lb						
6	1/8	6.4	6.7	17	3.18	22
8	1/4	8.1	10.2	19	3.30	25
10	3/8	9.1	10.4	22	3.51	33
15	1/2	10.9	13.6	25	4.09	38
20	3/4	12.7	13.9	28	4.32	46
25	1	14.7	17.3	33	4.98	56
32	1-1/4	17.0	18.0	35	5.28	62
40	1-1/2	17.8	18.4	43	5.56	75
50	2	19.0	19.2	44	7.14	84
65	2-1/2	23.6	28.9	52	7.65	102
80	3	25.9	30.5	64	8.84	121
100	4	27.7	33.0	79	11.18	152
6000Lb						
6	1/8	6.4	6.7	19	6.35	25
8	1/4	8.1	10.2	22	6.60	33
10	3/8	9.1	10.4	25	6.98	38
15	1/2	10·9	13·6	28	8·15	46
20	3/4	12.7	13.9	33	8.53	56
25	1	14.7	17.3	35	9.93	62
32	1-1/4	17.0	18.0	43	10.59	75
40	1-1/2	17.8	18.4	44	11.07	84
50	2	19.0	19.2	52	12.09	102
65	2-1/2	23.6	28.9	64	15.29	121
80	3	25.9	30.5	79	16.64	146
100	4	27.7	33.0	79	18.67	152

(*) Dimension B is minimum length of perfect thread. The length of useful thread (B plus threads with fully formed roots and flat crests) shall not be less than L2 (effective length of external thread) required by American National Standard for pipe threads (ANSI / ASME B1.20.1) .